NATIONAL YOUTH COUNCIL
2022

TENDER DRAWINGS FOR UPGRADING OF

YOUTH CENTRE OF GOODLANDS

Client: NATIONAL YOUTH COUNCIL

Mezzanine, Citadelle Mall,
Corner Louis Pasteur & Sir Virgil Naz Streets,
Port Louis.

(230) 206 17 84

Draughtsman: FASHION AND DESIGN INSTITUTE

Block A, MITD Complex, Ebène, Reduit.

(230) 467 62 77

REVAMPING OF NATIONAL YOUTH CENTRES
TENDER DRAWINGS
GOODLANDS

2022.

03.06.2022

UPGRADING OF YOUTH CENTRE AT GOODLANDS

LIST OF DRAWINGS

S/N	DRAWING TITLE	Drawing Number
1	LOCATION PLAN	GOO /014/NYC001
2	SITE PLAN A (EXISTING)	GOO /014/NYC002
3	SITE PLAN B (PROPOSED DEVELOPMENT)	GOO /014/NYC003
4	EXISTING GROUND FLOOR PLAN	GOO /014/NYC004
5	EXISTING ELEVATION PLAN	GOO /014/NYC005
6	DEMOLITION GROUND FLOOR PLAN	GOO /014/NYC006
7	PROPOSED GROUND FLOOR PLAN	GOO /014/NYC007
8	PROPOSED ELEVATION PLAN	GOO /014/NYC008
9	DISABLED TOILET	GOO /014/NYC009
10	DISABLED TOILET – STRUCTURAL DETAILS	GOO /014/NYC010
11	SCHEDULE OF GLAZED PARTITION FOR OFFICES	GOO /014/NYC011
12	SCHEDULE OF OPENINGS 1 (MAIN BUILDING & DISABLE TOILET)	GOO /014/NYC012
13	SCHEDULE OF OPENINGS 2 (MAIN BUILDING & DISABLE TOILET)	GOO /014/NYC013
14	WATCHMAN POST	GOO /014/NYC014
15	WATCHMAN POST – STRUCTURAL DETAILS	GOO /014/NYC015
16	SCHEDULE OF OPENINGS (WATCHMAN POST)	GOO /014/NYC016
17	WATER DISPOSAL DETAILS	GOO /014/NYC017

LOCATION PLAN

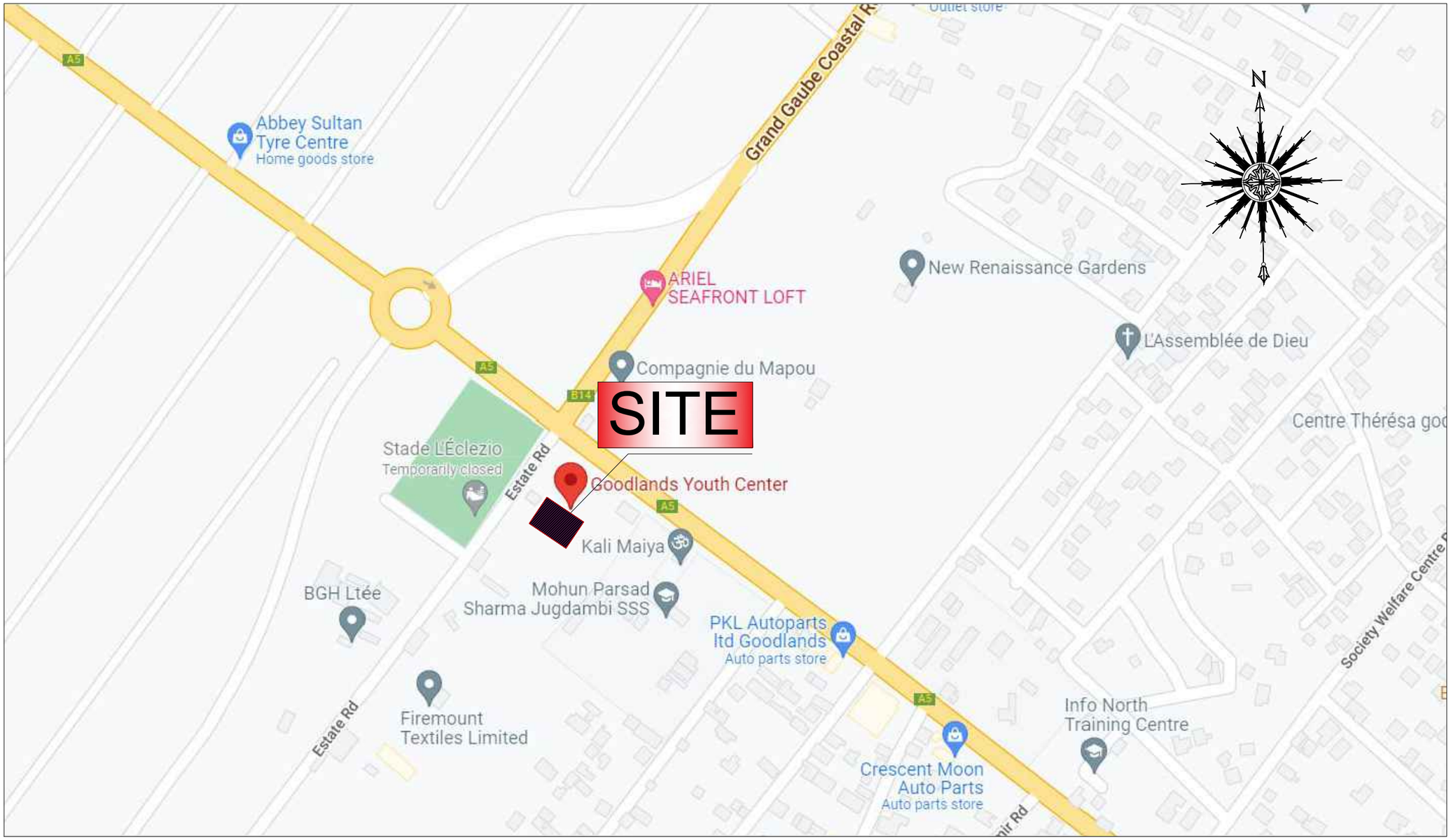

Rev	Date	Made By	Checked By	App By
First Issue				
00	17.03.2022	A.B	M.B	M.B

DRAUGHTSMAN :

fashion & design institute
Block A,
MITD Complex
Ebene, Reduit
Telephone: (230) 467 6277
Fax: (230) 466 4105

CLIENT :

National Youth Council

Mezzanine, Citadelle Mall,
Corner Louis Pasteur & Sir Virgil Naz Streets,
Port-Louis
Telephone: (230) 2061784
email: : nycprocurement1@gmail.com

PROJECT :
Upgrading of Youth Centre at Goodlands

PLEASE DO NOT SCALE-
USE FIGURED DIMENSIONS ONLY

DRAWING TITLE:
Location Plan

SCALE:
N.T.S

DRAWING STATUS:
For Tender

DRAWING NO.:
GOO/014/NYC001

REVISION
00

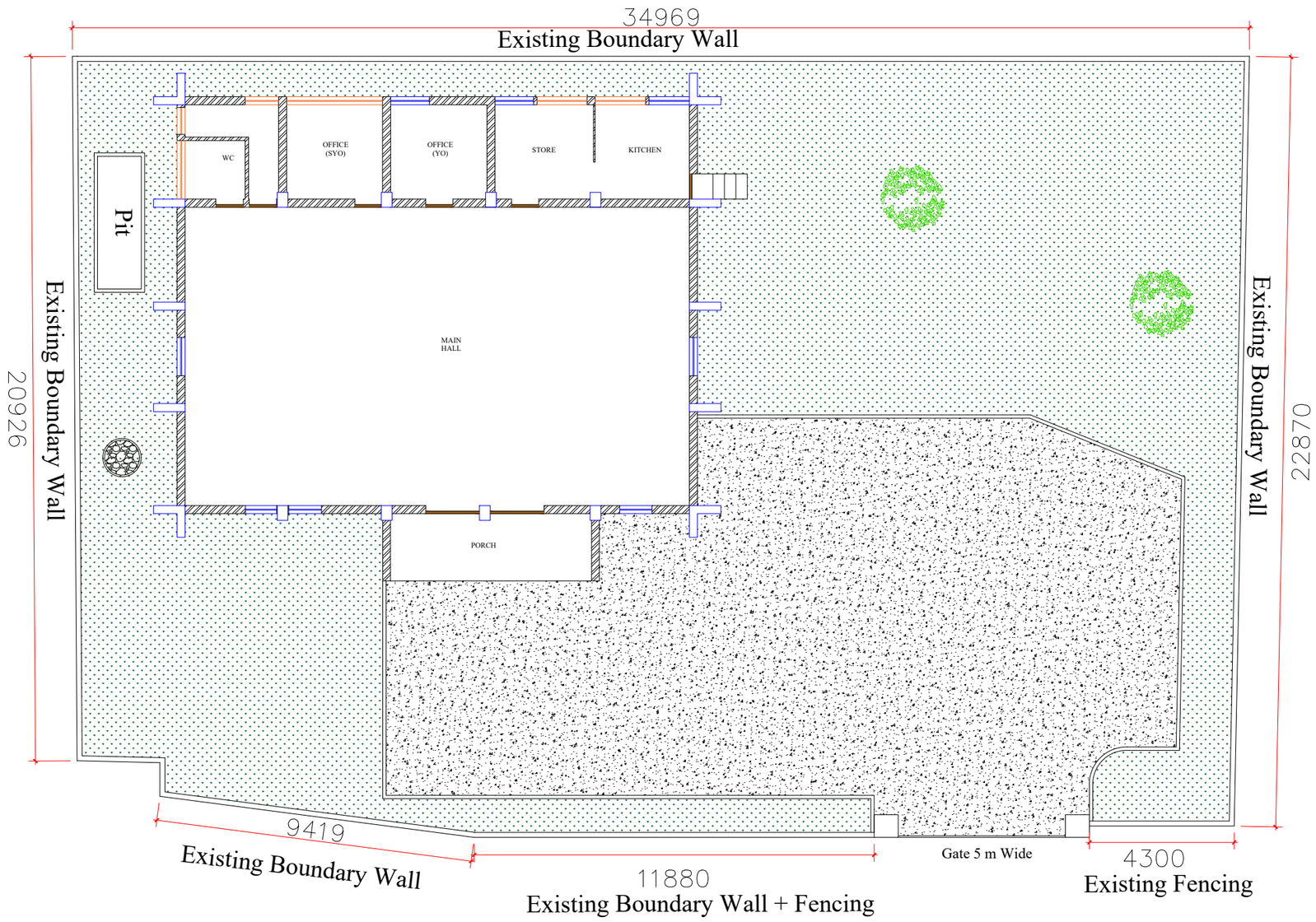

LEGEND

- Soakaway
- Existing Trees
- Footpath
- Green Space
- Stone Paving
- Tarmac Paving
- Septic Tank
- Absortion Pit
- Manhole (M.H)

Rev	Date	Made By	Checked By	App By
First Issue				
00	17.03.2022	A.B	M.B	M.B

DRAUGHTSMAN :

fashion & design institute
Block A,
MITD Complex
Ebene, Reduit
Telephone: (230) 467 6277
Fax: (230) 466 4105

CLIENT :

National Youth Council

Mezzanine, Citadelle Mall,
Corner Louis Pasteur & Sir Virgil Naz Streets,
Port-Louis
Telephone: (230) 2061784
email: : nycprocurement1@gmail.com

PROJECT :
Upgrading of Youth Centre at Goodlands

PLEASE DO NOT SCALE-
USE FIGURED DIMENSIONS ONLY

DRAWING TITLE:
Site Plan A *(Existing)*

SCALE:
1:200

DRAWING STATUS:
For Tender

DRAWING NO.:
GOO/014/NYC002

REVISION
00

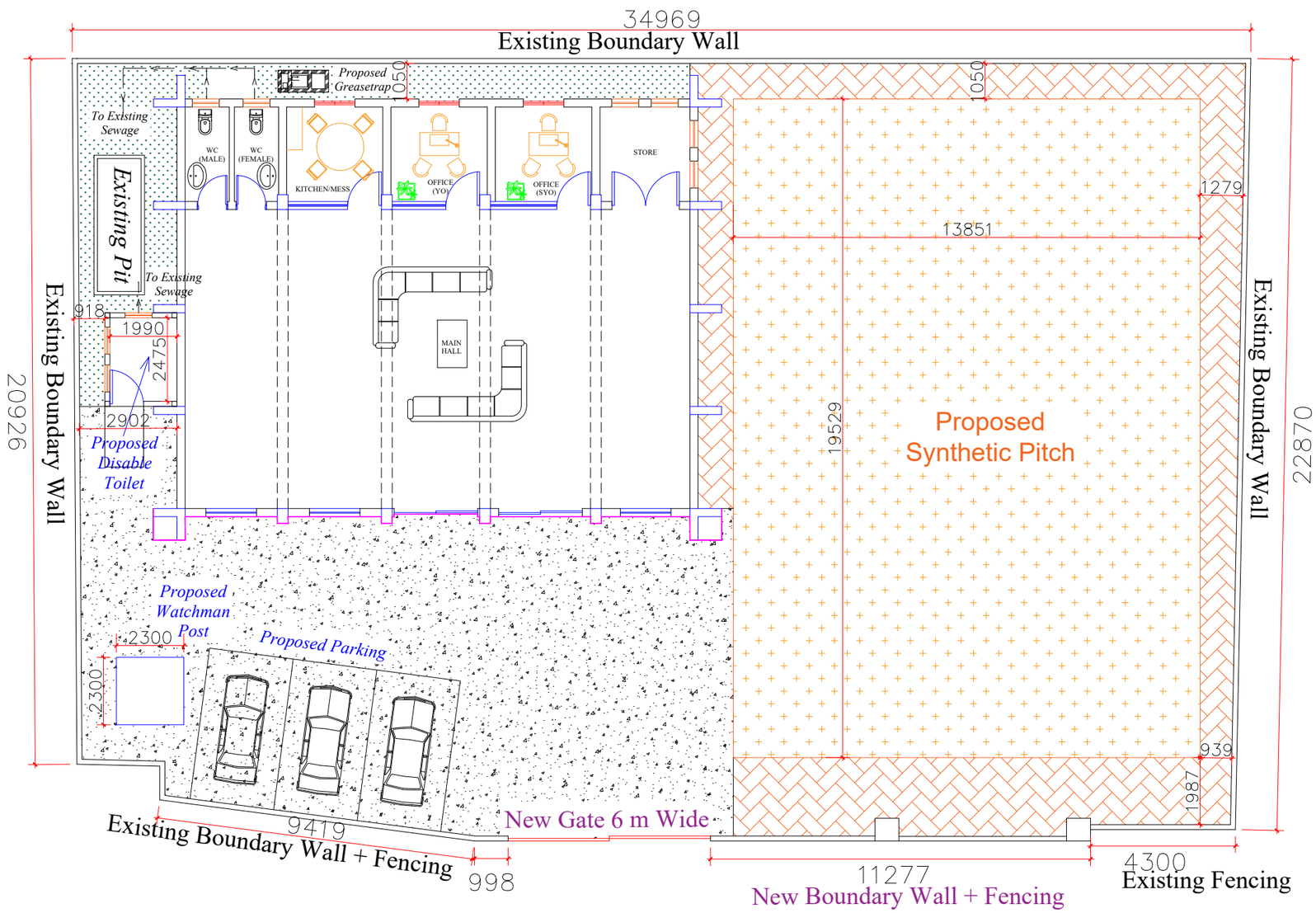

LEGEND

- Soakaway
- Existing Trees
- Brick Paving
- Green Space
- Stone Paving
- Tarmac Paving
- Septic Tank
- Absorption Pit
- Manhole

Rev	Date	Made By	Checked By	App By
First Issue				
00	17.03.2022	A.B	M.B	M.B

DRAUGHTSMAN :

fashion & design institute
Block A,
MITD Complex
Ebene, Reduit
Telephone: (230) 467 6277
Fax: (230) 466 4105

CLIENT :

National Youth Council

Mezzanine, Citadelle Mall,
Corner Louis Pasteur & Sir Virgil Naz Streets,
Port-Louis
Telephone: (230) 2061784
email: : nycprocurement1@gmail.com

PROJECT :
Upgrading of Youth Centre at Goodlands

PLEASE DO NOT SCALE-
USE FIGURED DIMENSIONS ONLY

DRAWING TITLE:
Site Plan B *(Proposed Development)*

SCALE:
1:150

DRAWING STATUS:
For Tender

DRAWING NO.:
GOO/014/NYC003

REVISION
00

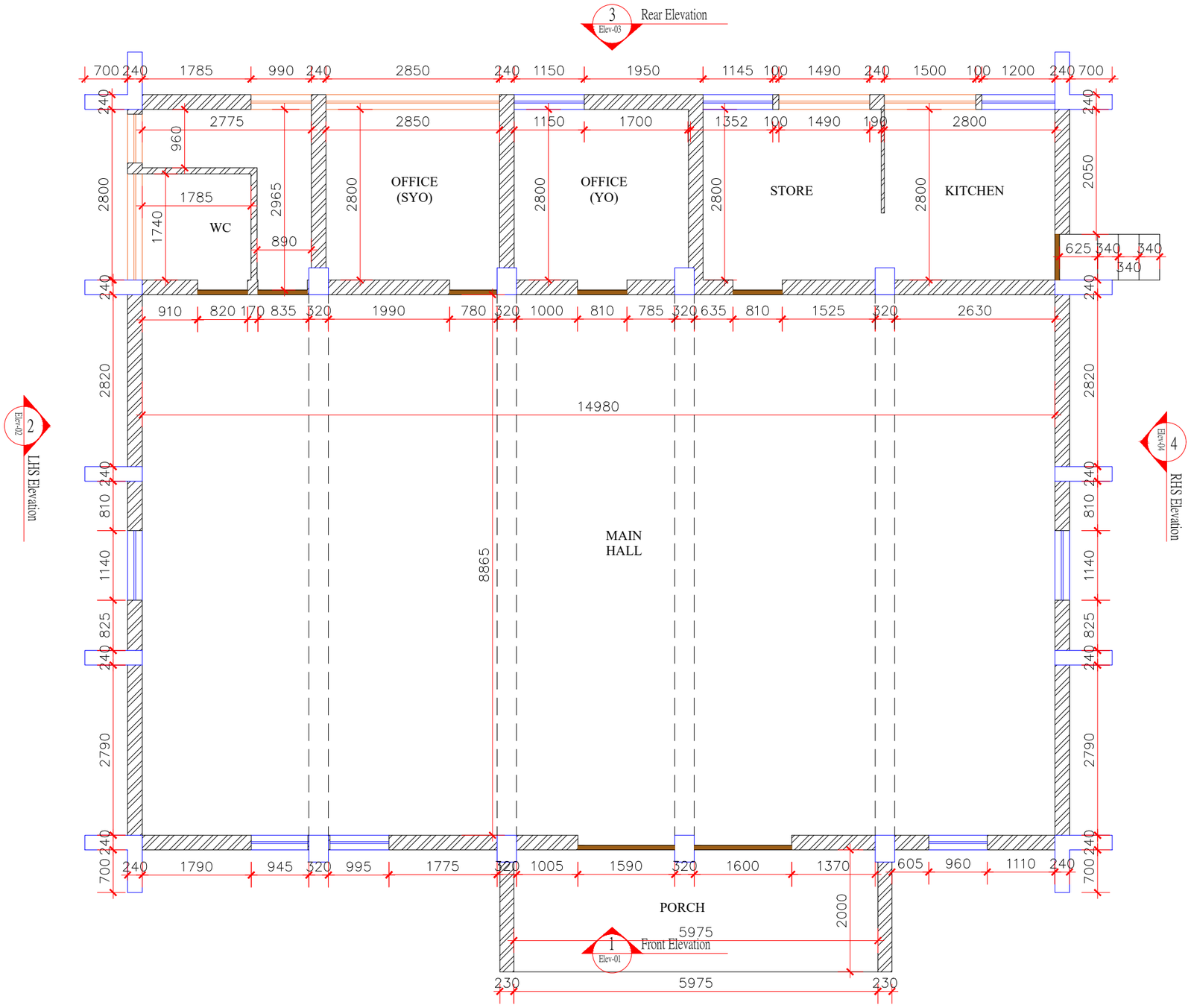

Rev	Date	Made By	Checked By	App By
First Issue				
00	17.03.2022	A.B	M.B	

DRAUGHTSMAN :

fashion & design institute
Block A,
MITD Complex
Ebene, Reduit
Telephone: (230) 467 6277
Fax: (230) 466 4105

CLIENT :

National Youth Council

Mezzanine, Citadelle Mall,
Corner Louis Pasteur & Sir Virgil Naz Streets,
Port-Louis
Telephone: (230) 2061784
email: : nycprocurement1@gmail.com

PROJECT :
Upgrading of Youth Centre at Goodlands

PLEASE DO NOT SCALE-
USE FIGURED DIMENSIONS ONLY

DRAWING TITLE:
Existing Ground Floor Plan

SCALE:
1:75

DRAWING STATUS:
For Tender

DRAWING NO.:
GO/014/NYC004

REVISION
00

FRONT

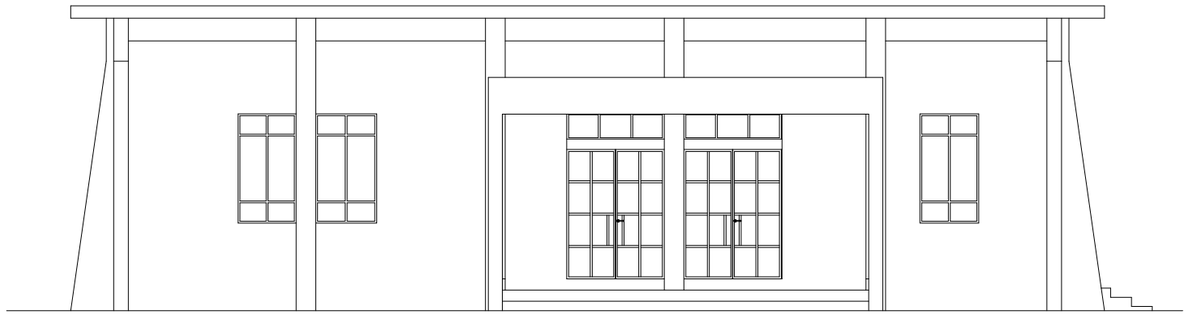

BACK

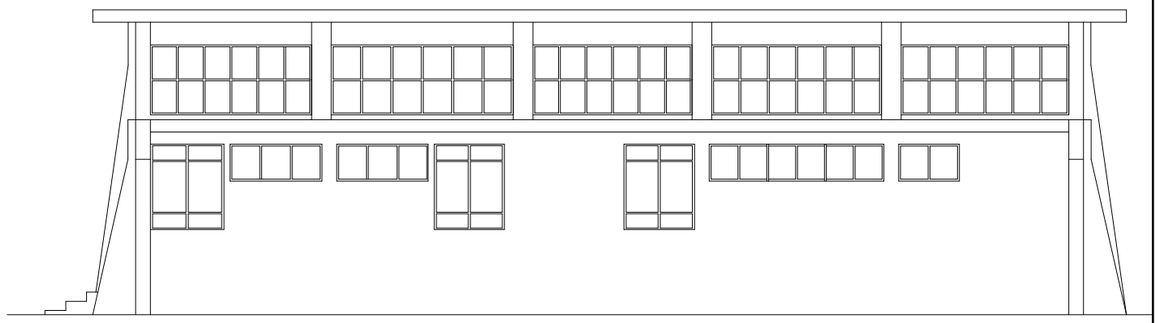

RIGHT HAND SIDE

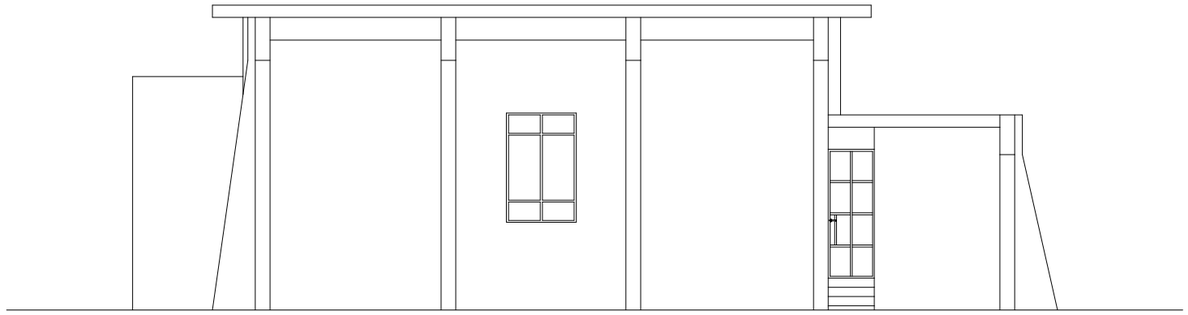

LEFT HAND SIDE

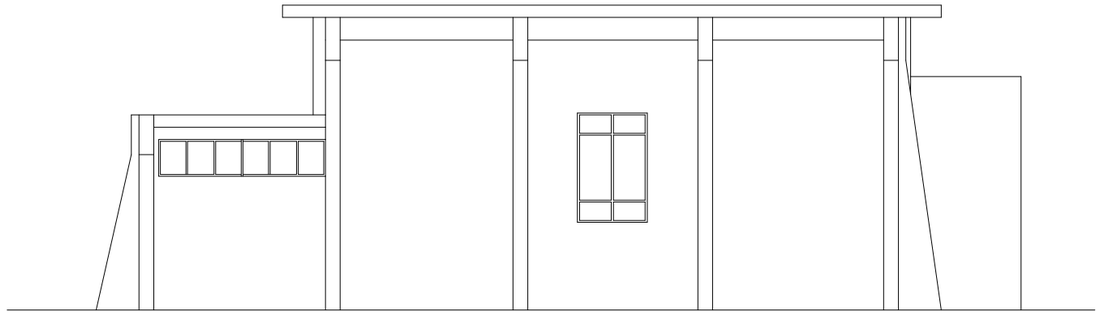

Rev	Date	Made By	Checked By	App By
First Issue				
00	17.03.2022	A.B	M.B	

DRAUGHTSMAN :

fashion & design institute

Block A,
MITD Complex
Ebene, Reduit
Telephone: (230) 467 6277
Fax: (230) 466 4105

CLIENT :

National Youth Council

Mezzanine, Citadelle Mall,
Corner Louis Pasteur & Sir Virgil Naz Streets,
Port-Louis
Telephone: (230) 2061784
email: : nycprocurement1@gmail.com

PROJECT :
Upgrading of Youth Centre at Goodlands

PLEASE DO NOT SCALE-
USE FIGURED DIMENSIONS ONLY

DRAWING TITLE:
Existing Elevation Plan

SCALE:
1:100

DRAWING STATUS:
For Tender

DRAWING NO.:
GOO/014/NYC005

REVISION
00

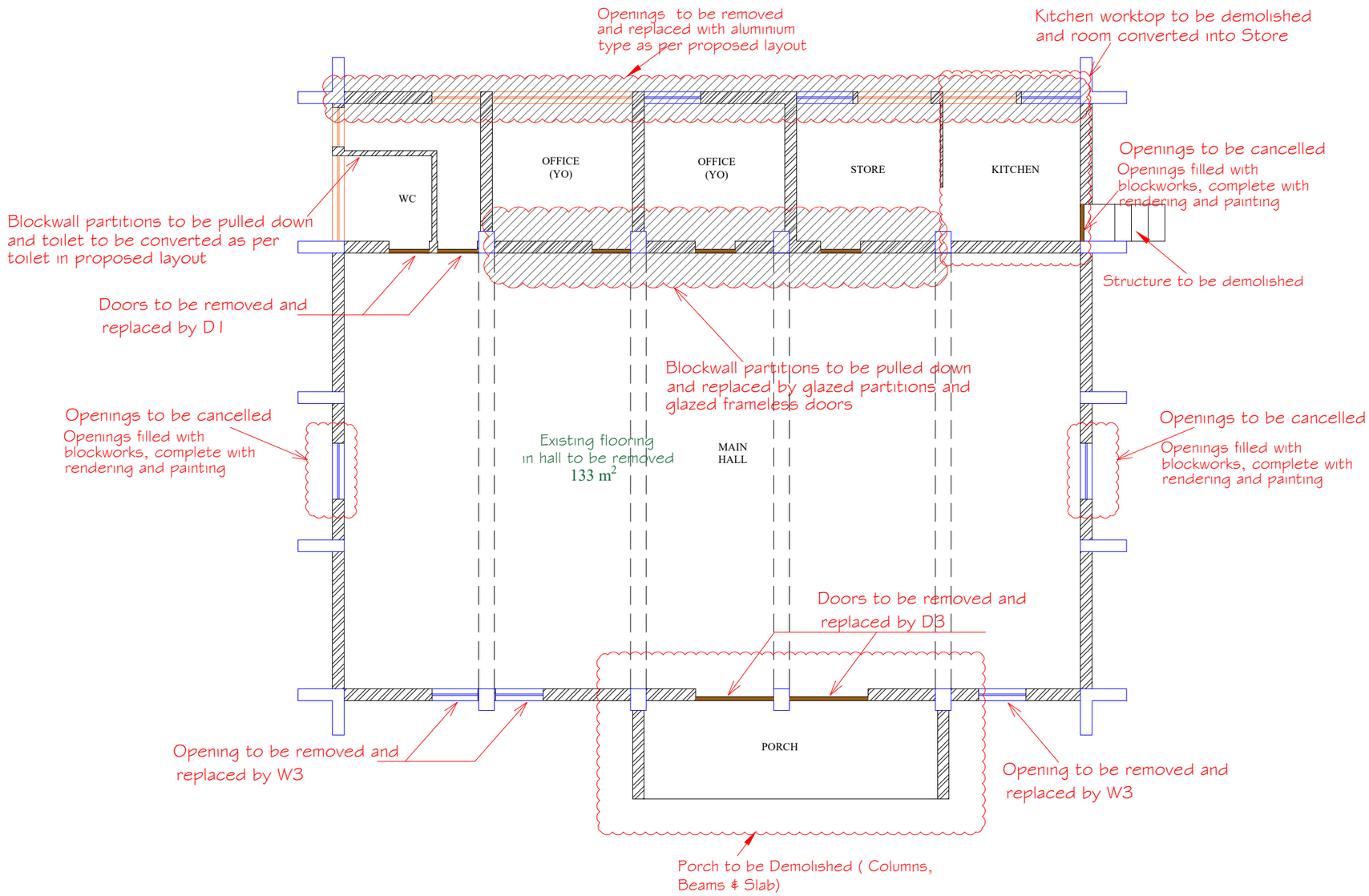

Rev	Date	Made By	Checked By	App By
First Issue				
00	17.03.2022	A.B	M.B	

DRAUGHTSMAN :

fashion & design institute
Block A,
MITD Complex
Ebene, Reduit
Telephone: (230) 467 6277
Fax: (230) 466 4105

CLIENT :

National Youth Council

Mezzanine, Citadelle Mall,
Corner Louis Pasteur & Sir Virgil Naz Streets,
Port-Louis
Telephone: (230) 2061784
email: : nycprocurement1@gmail.com

PROJECT :
Upgrading of Youth Centre at Goodlands

PLEASE DO NOT SCALE-
USE FIGURED DIMENSIONS ONLY

DRAWING TITLE:
Demolition Ground Floor Plan

SCALE:
1:100

DRAWING STATUS:
For Tender

DRAWING NO.:
GOO/014/NYC006

REVISION
00

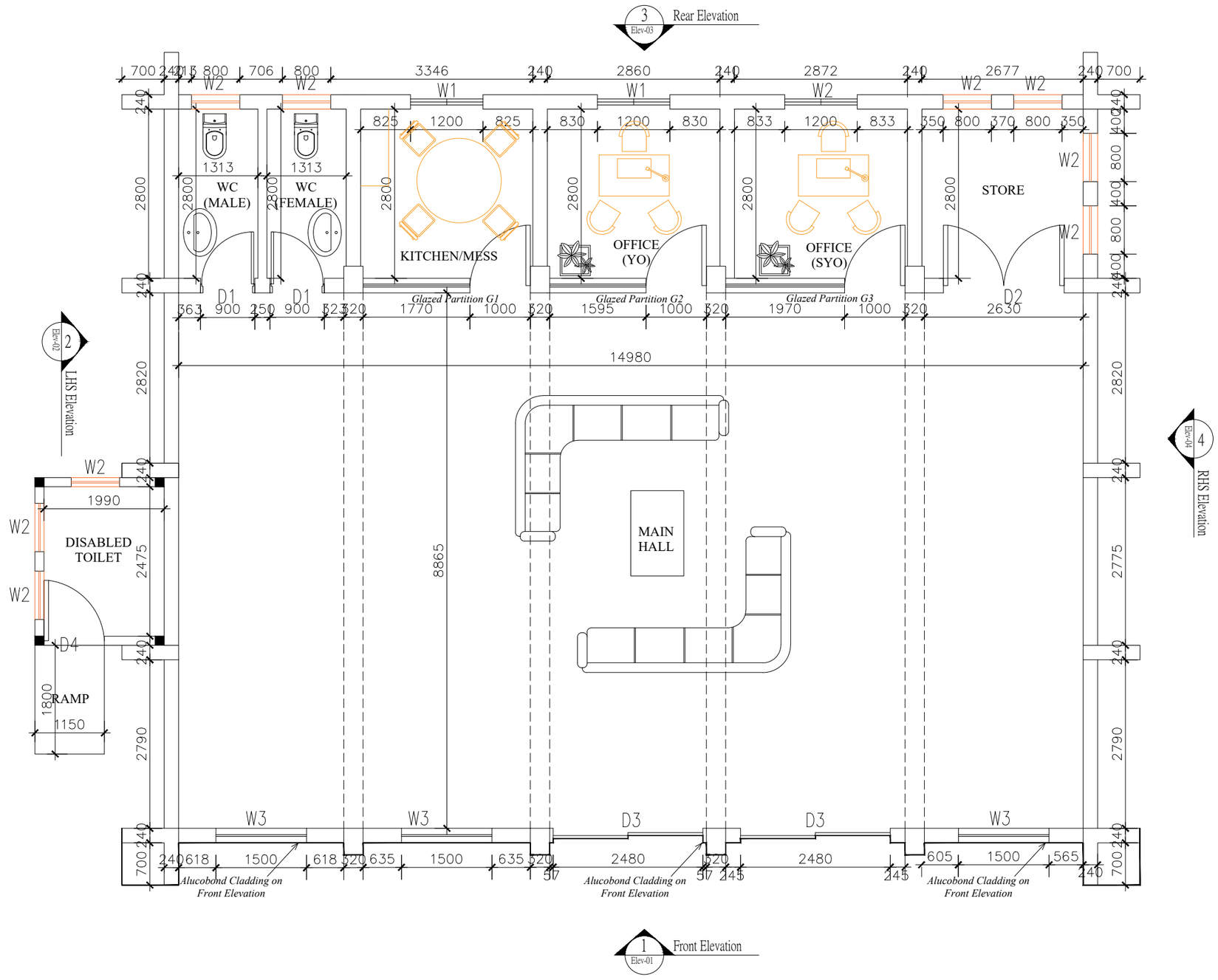

Rev	Date	Made By	Checked By	App By
First Issue				
00	17.03.2022	A.B	M.B	

DRAUGHTSMAN :

fashion & design institute
Block A,
MITD Complex
Ebene, Reduit
Telephone: (230) 467 6277
Fax: (230) 466 4105

CLIENT :

National Youth Council

Mezzanine, Citadelle Mall,
Corner Louis Pasteur & Sir Virgil Naz Streets,
Port-Louis
Telephone: (230) 2061784
email: : nycprocurement1@gmail.com

PROJECT :
Upgrading of Youth Centre at Goodlands

PLEASE DO NOT SCALE-
USE FIGURED DIMENSIONS ONLY

DRAWING TITLE:
Proposed Ground Floor Plan

SCALE:
1:75

DRAWING STATUS:
For Tender

DRAWING NO.:
GOO/014/NYC007

REVISION
00

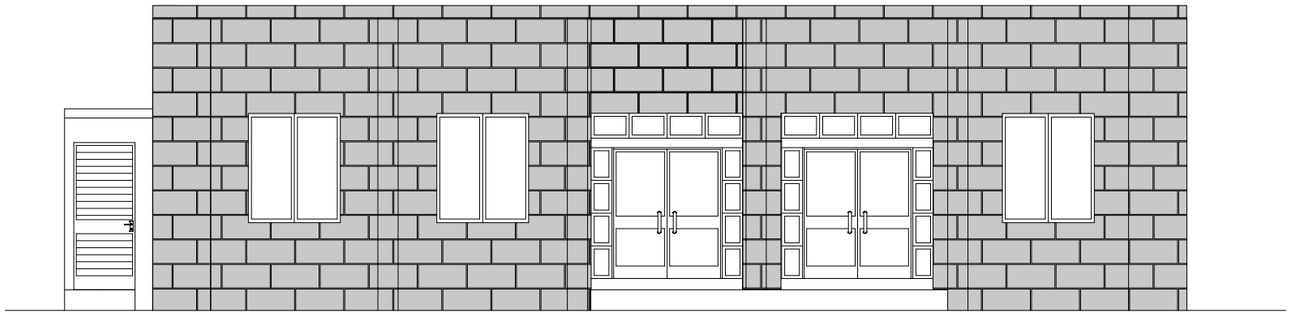

Front Elevation 1

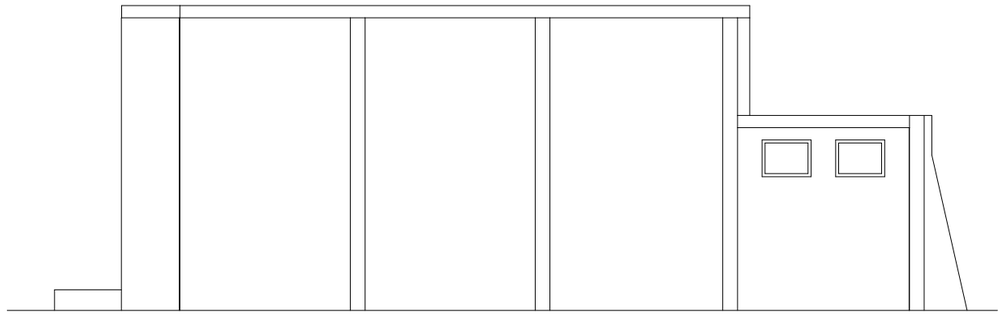

RHS Elevation 4

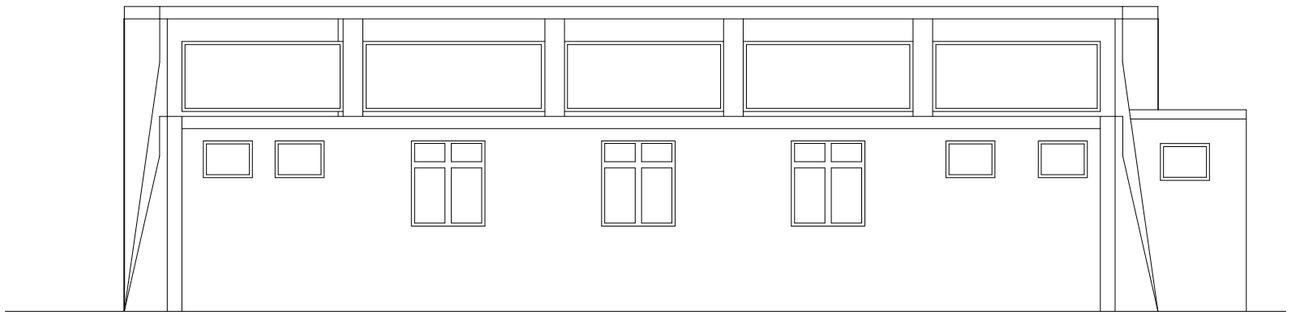

Rear Elevation 3

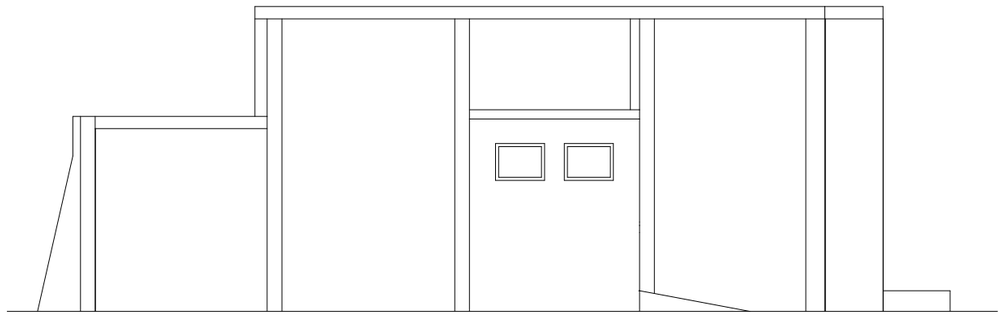

LHS Elevation 2

Rev	Date	Made By	Checked By	App By
		First Issue		
00	17.03.2022	A.B	M.B	

DRAUGHTSMAN :

fashion & design institute
Block A,
MITD Complex
Ebene, Reduit
Telephone: (230) 467 6277
Fax: (230) 466 4105

CLIENT :

National Youth Council

Mezzanine, Citadelle Mall,
Corner Louis Pasteur & Sir Virgil Naz Streets,
Port-Louis
Telephone: (230) 2061784
email: : nycprocurement1@gmail.com

PROJECT :
Upgrading of Youth Centre at Goodlands

PLEASE DO NOT SCALE-
USE FIGURED DIMENSIONS ONLY

DRAWING TITLE:
Proposed Elevation Plan

SCALE:
1:100

DRAWING STATUS:
For Tender

DRAWING NO.:
GOO/014/NYC008

REVISION
00

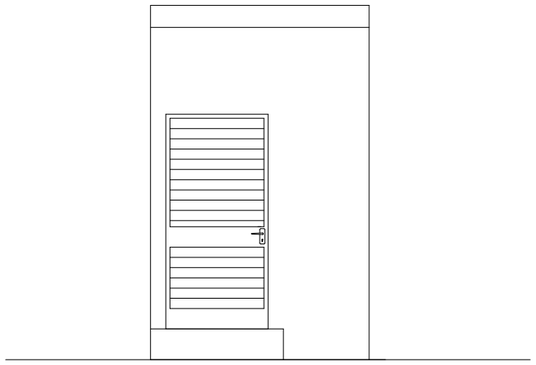

ELEVATION A

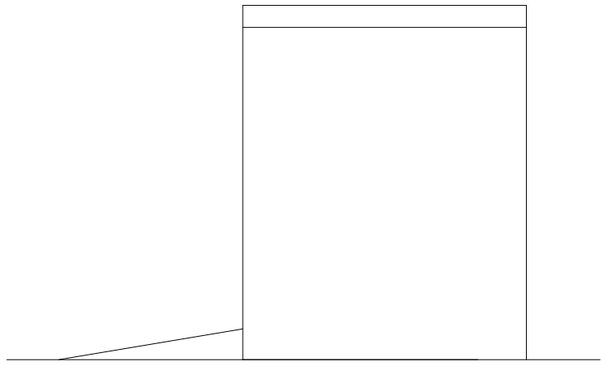

ELEVATION B

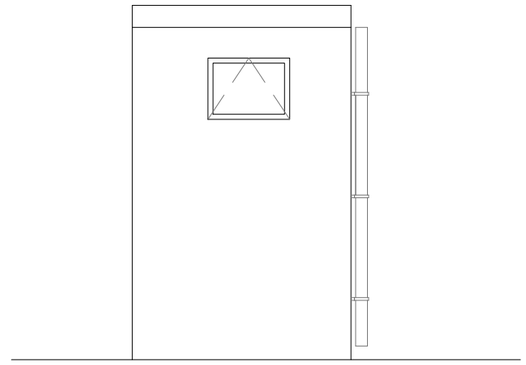

ELEVATION C

ELE C

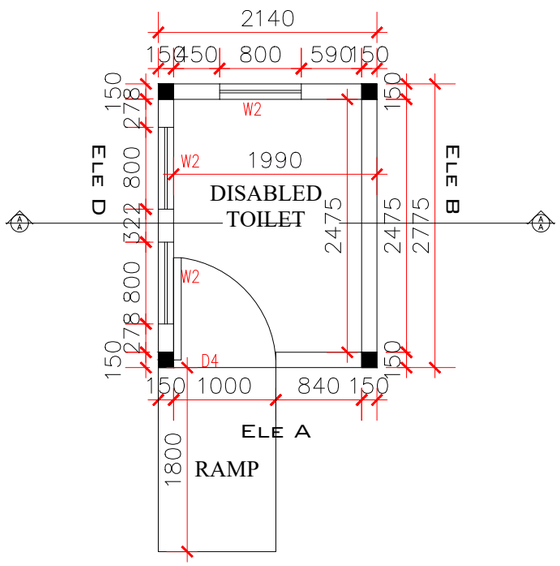

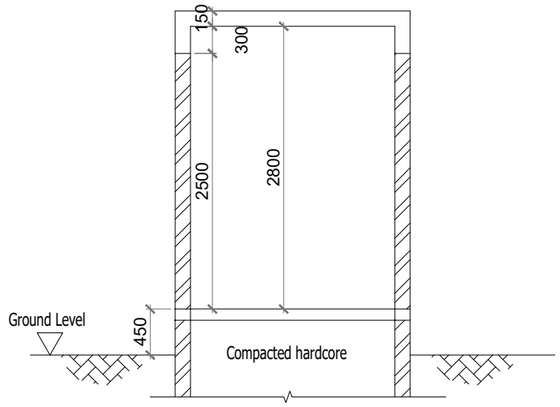

SECTION A-A

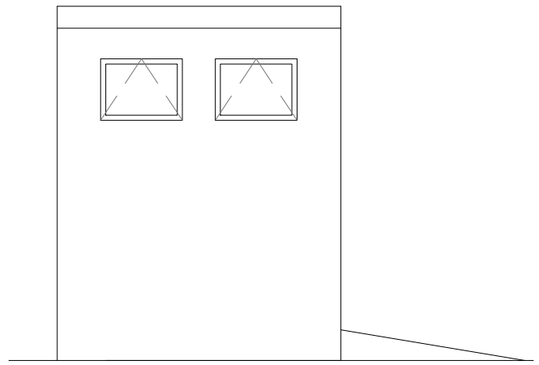

ELEVATION D

Rev	Date	Made By	Checked By	App By
First Issue				
00	17.03.2022	A.B	M.B	

DRAUGHTSMAN :

fashion & design institute
Block A,
MITD Complex
Ebene, Reduit
Telephone: (230) 467 6277
Fax: (230) 466 4105

CLIENT :

National Youth Council

Mezzanine, Citadelle Mall,
Corner Louis Pasteur & Sir Virgil Naz Streets,
Port-Louis
Telephone: (230) 2061784
email: : nycprocurement1@gmail.com

PROJECT :
Upgrading of Youth Centre at Goodlands

PLEASE DO NOT SCALE-
USE FIGURED DIMENSIONS ONLY

DRAWING TITLE:
Disabled Toilet

SCALE:
1:60

DRAWING STATUS:
For Tender

DRAWING NO.:
GOO/014/NYC009

REVISION
00

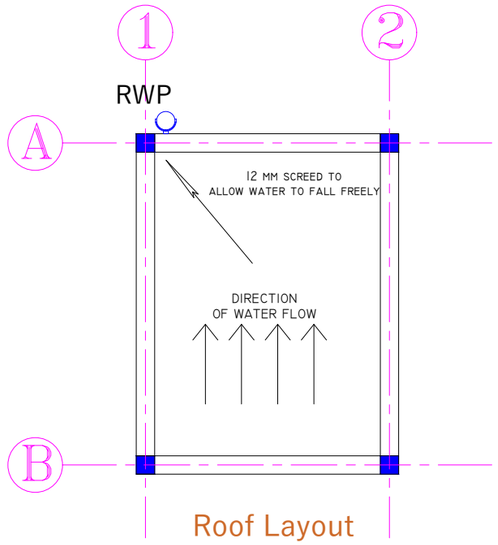

Roof Layout

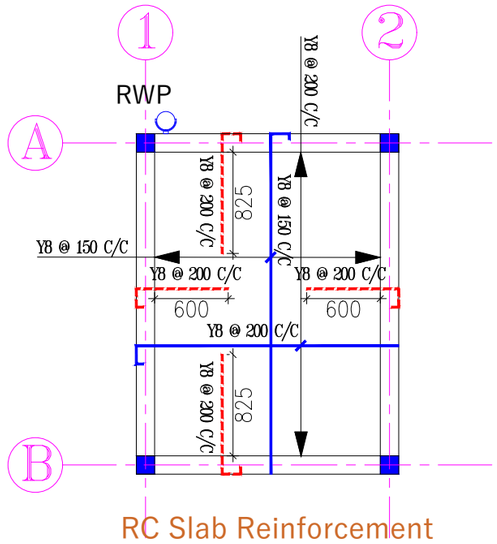

RC Slab Reinforcement

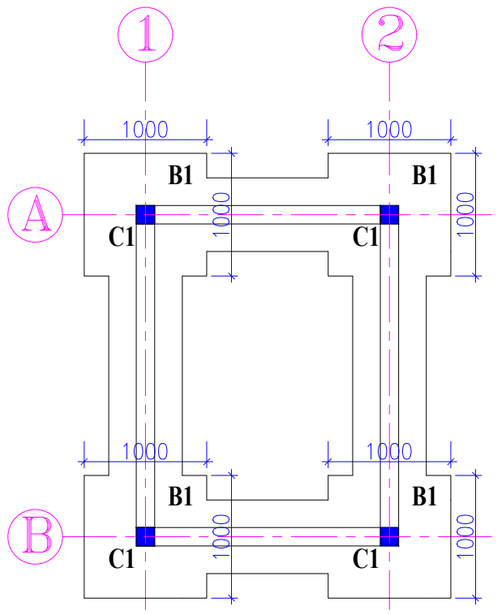

Foundation Layout

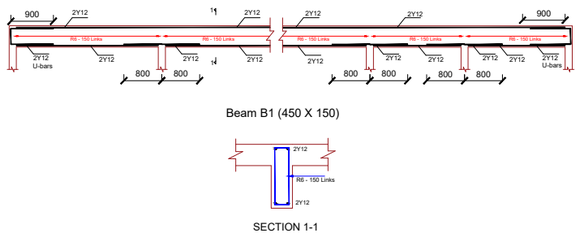

Beam B1 (450 X 150)

SECTION 1-1

Beam Details

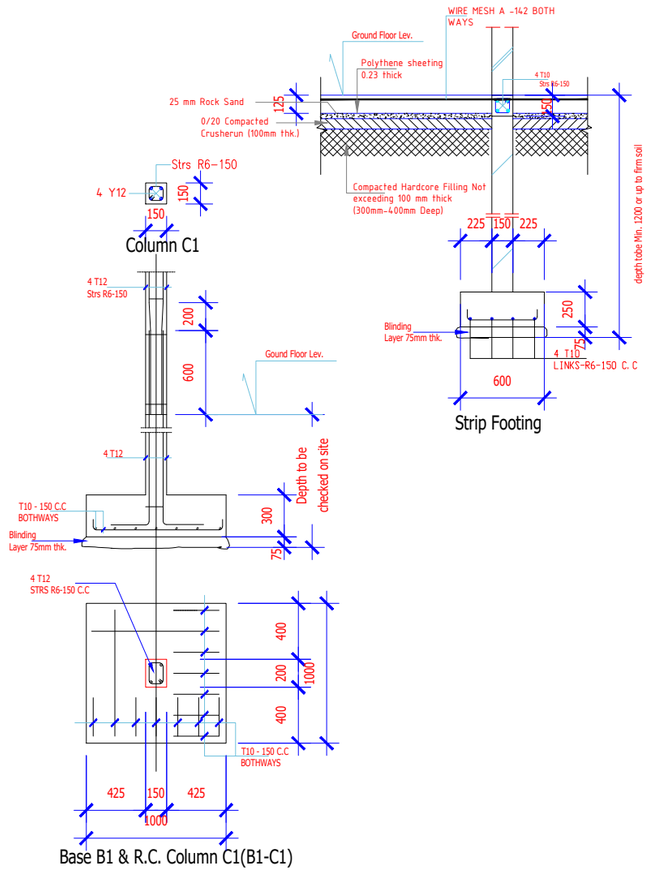

Base B1 & R.C. Column C1(B1-C1)

Foundation Details

Rev	Date	Made By	Checked By	App By
First Issue				
00	17.03.2022	A.B	M.B	

DRAUGHTSMAN :

fashion & design institute
Block A,
MITD Complex
Ebene, Reduit
Telephone: (230) 467 6277
Fax: (230) 466 4105

CLIENT :

National Youth Council

Mezzanine, Citadelle Mall,
Corner Louis Pasteur & Sir Virgil Naz Streets,
Port-Louis
Telephone: (230) 2061784
email: : nycprocurement1@gmail.com

PROJECT :
Upgrading of Youth Centre
at Goodlands

PLEASE DO NOT SCALE-
USE FIGURED DIMENSIONS ONLY

DRAWING TITLE:
Disabled Toilet - Structural Details

SCALE:
As Shown

DRAWING STATUS:
For Tender

DRAWING NO.:
GOO/014/NYC010

REVISION
00

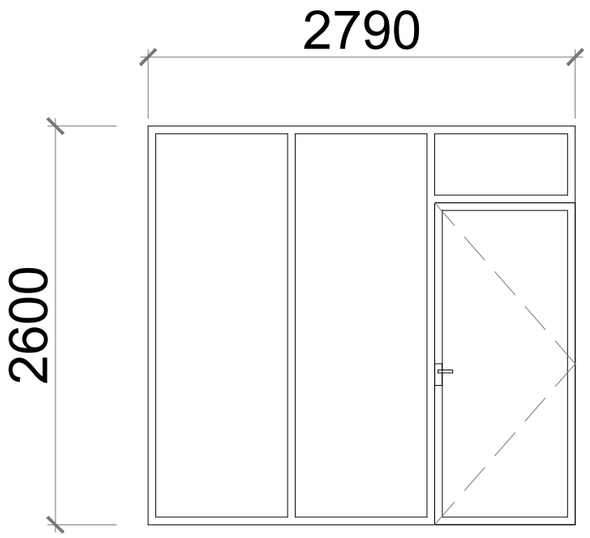

G1

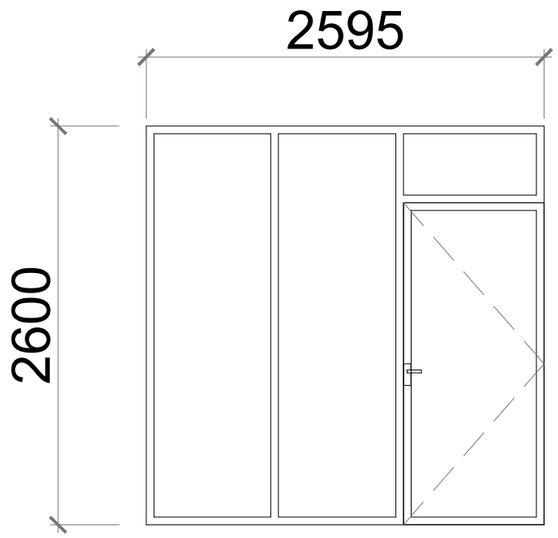

G2

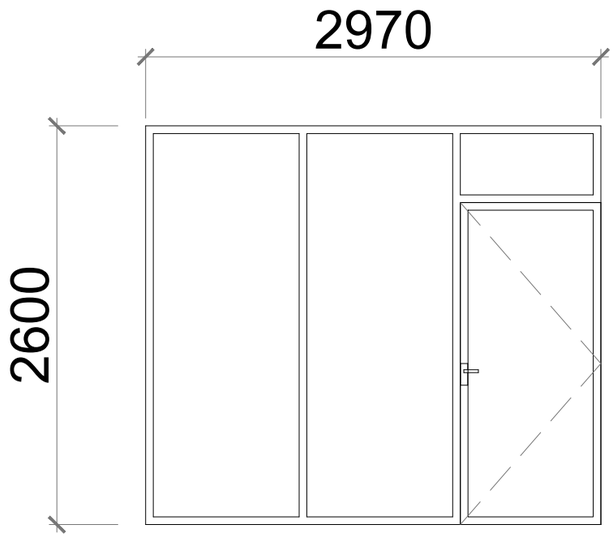

G3

Rev	Date	Made By	Checked By	App By
First Issue				
00	17.03.2022	A.B	M.B	

DRAUGHTSMAN :

fashion & design institute
Block A,
MITD Complex
Ebene, Reduit
Telephone: (230) 467 6277
Fax: (230) 466 4105

CLIENT :

National Youth Council

Mezzanine, Citadelle Mall,
Corner Louis Pasteur & Sir Virgil Naz Streets,
Port-Louis
Telephone: (230) 2061784
email: : nycprocurement1@gmail.com

PROJECT :
Upgrading of Youth Centre at Goodlands

PLEASE DO NOT SCALE-
USE FIGURED DIMENSIONS ONLY

DRAWING TITLE:
Schedule of Glazed Partition for Offices

SCALE:
As Shown

DRAWING STATUS:
For Tender

DRAWING NO.:
GOO/014/NYC011

REVISION
00

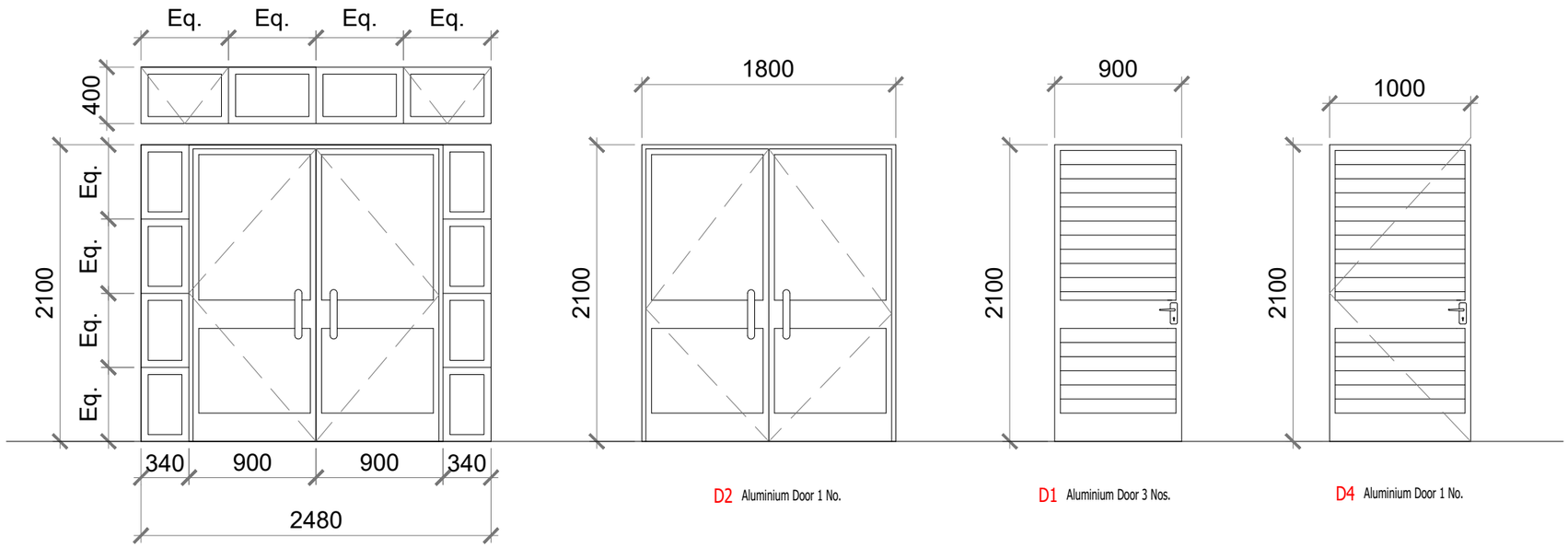

D3 Aluminium Door 2 Nos.

D2 Aluminium Door 1 No.

D1 Aluminium Door 3 Nos.

D4 Aluminium Door 1 No.

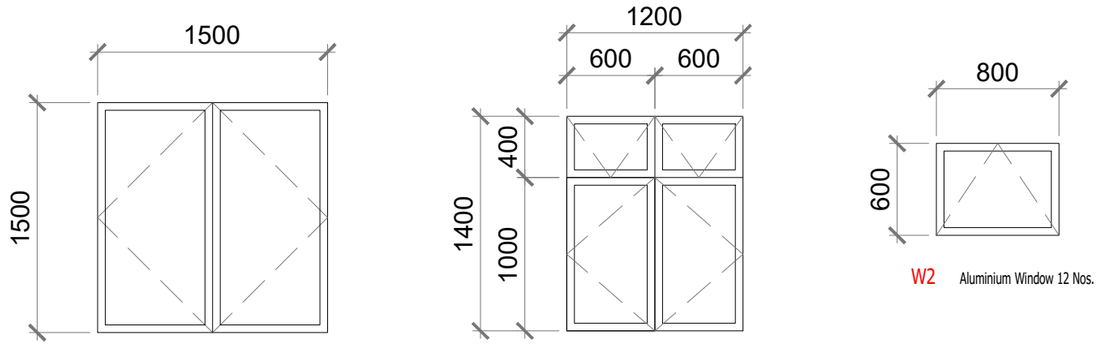

W3 Aluminium Window 3 Nos.

W1 Aluminium Window 3 Nos.

W2 Aluminium Window 12 Nos.

Rev	Date	Made By	Checked By	App By
First Issue				
00	17.03.2022	A.B	M.B	

DRAUGHTSMAN :

fashion & design institute
Block A,
MITD Complex
Ebene, Reduit
Telephone: (230) 467 6277
Fax: (230) 466 4105

CLIENT :

National Youth Council

Mezzanine, Citadelle Mall,
Corner Louis Pasteur & Sir Virgil Naz Streets,
Port-Louis
Telephone: (230) 2061784
email: : nycprocurement1@gmail.com

PROJECT :
Upgrading of Youth Centre at Goodlands

PLEASE DO NOT SCALE-
USE FIGURED DIMENSIONS ONLY

DRAWING TITLE:
Schedule of Openings 1 (Main Building & Disable Toilet)

SCALE:
As Shown

DRAWING STATUS:
For Tender

DRAWING NO.:
GOO/014/NYC012

REVISION
00

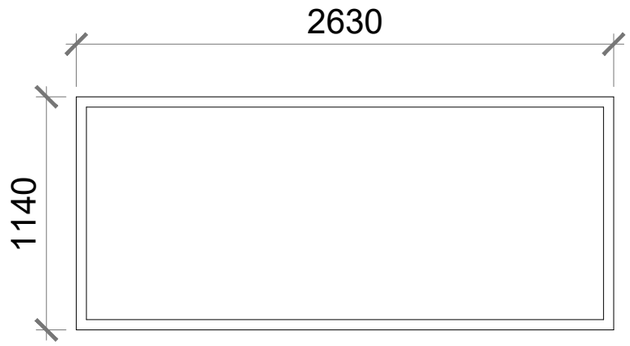

W4 Aluminium Window 1 No.

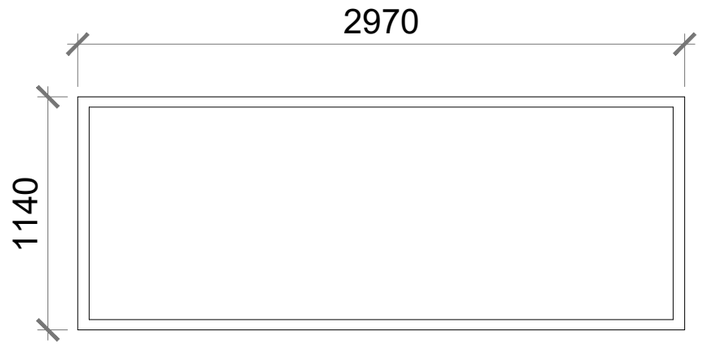

W5 Aluminium Window 1 No.

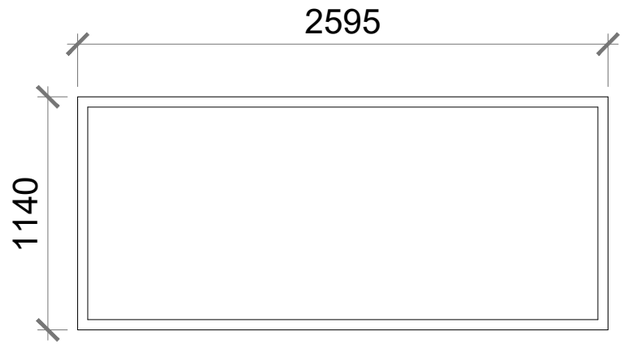

W6 Aluminium Window 1 No.

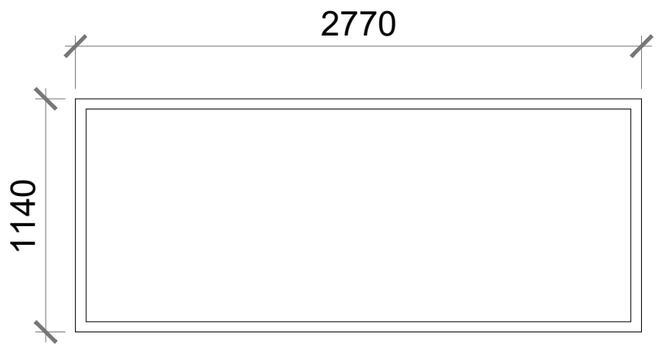

W7 Aluminium Window 1 No.

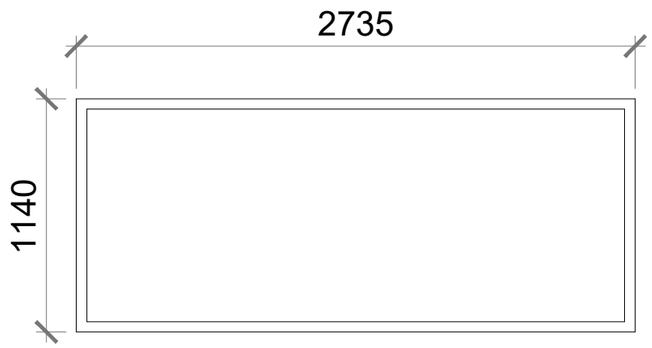

W8 Aluminium Window 1 No.

Note: W4, W5, W6, W7 and W8 are found above the Glazed Partitions for the offices

Rev	Date	Made By	Checked By	App By
First Issue				
00	17.03.2022	A.B	M.B	

DRAUGHTSMAN :

fashion & design institute
Block A,
MITD Complex
Ebene, Reduit
Telephone: (230) 467 6277
Fax: (230) 466 4105

CLIENT :

National Youth Council

Mezzanine, Citadelle Mall,
Corner Louis Pasteur & Sir Virgil Naz Streets,
Port-Louis
Telephone: (230) 2061784
email: : nycprocurement1@gmail.com

PROJECT :
Upgrading of Youth Centre at Goodlands

PLEASE DO NOT SCALE-
USE FIGURED DIMENSIONS ONLY

DRAWING TITLE:
Schedule of Openings 2 (Main Building & Disable Toilet)

SCALE:
As Shown

DRAWING STATUS:
For Tender

DRAWING NO.:
GOO/014/NYC013

REVISION
00

ELEVATION A

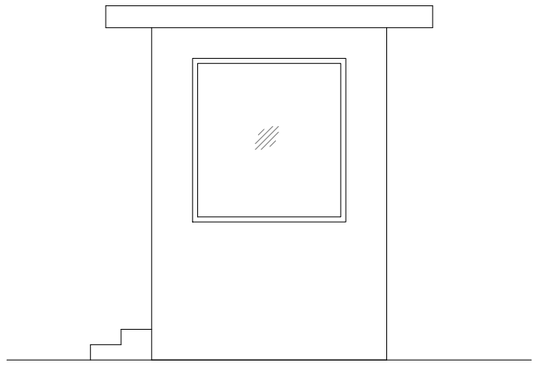

ELEVATION B

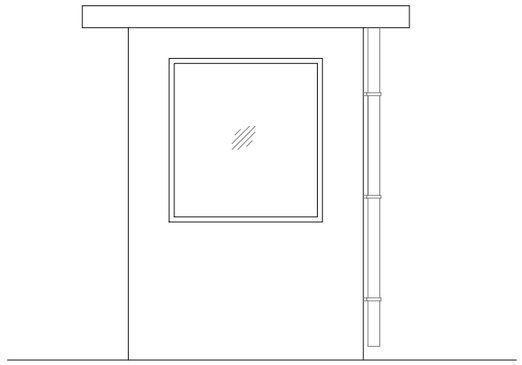

ELEVATION C

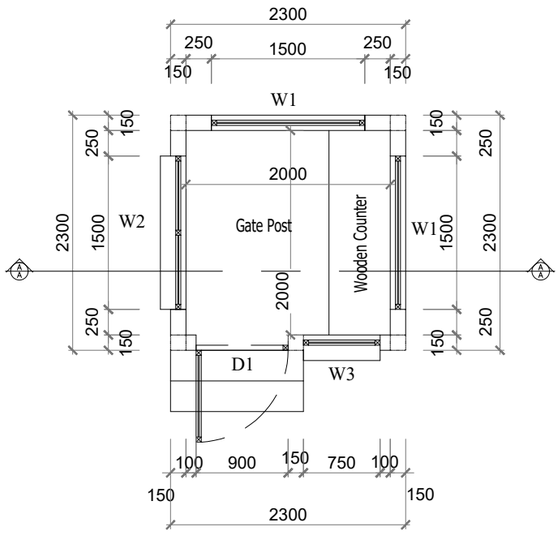

LAYOUT PLAN
(AREA: 5.0 M2)

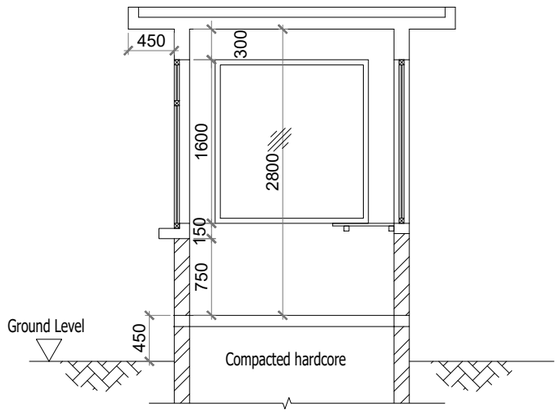

SECTION A-A

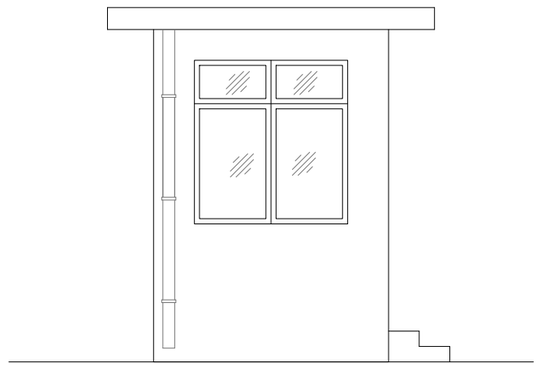

ELEVATION D

Rev	Date	Made By	Checked By	App By
First Issue				
00	17.03.2022	A.B	M.B	

DRAUGHTSMAN :

fashion & design institute
Block A,
MITD Complex
Ebene, Reduit
Telephone: (230) 467 6277
Fax: (230) 466 4105

CLIENT :

National Youth Council

Mezzanine, Citadelle Mall,
Corner Louis Pasteur & Sir Virgil Naz Streets,
Port-Louis
Telephone: (230) 2061784
email: : nycprocurement1@gmail.com

PROJECT :
Upgrading of Youth Centre at Goodlands

PLEASE DO NOT SCALE-
USE FIGURED DIMENSIONS ONLY

DRAWING TITLE:
Watchman Post

SCALE:
1:60

DRAWING STATUS:
For Tender

DRAWING NO.:
GOO/014/NYC014

REVISION
00

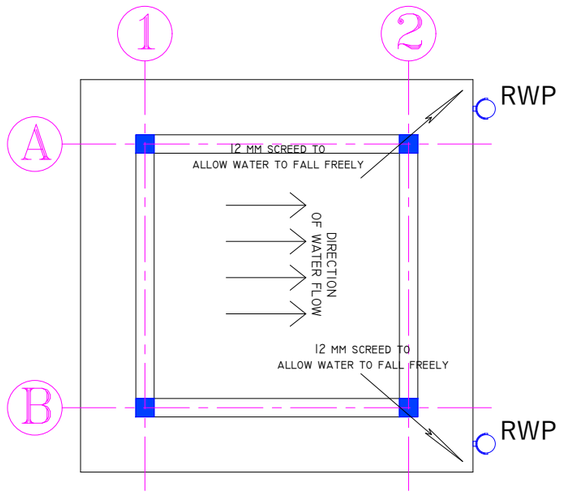

Roof Layout

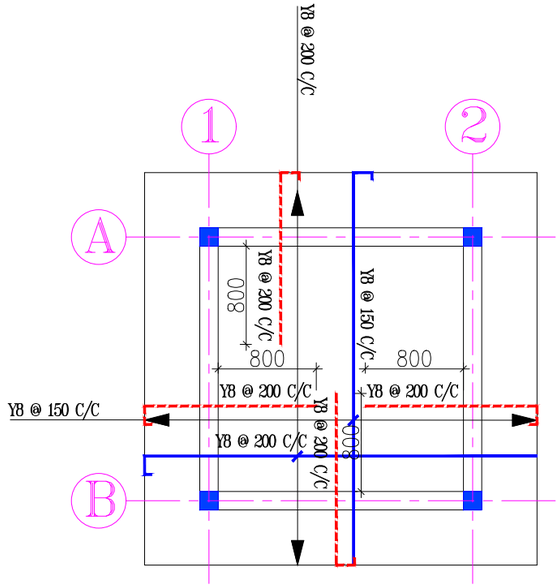

RC Slab Reinforcement

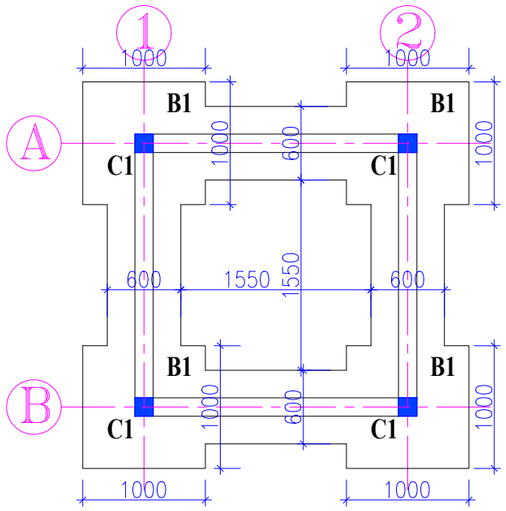

Foundation Layout

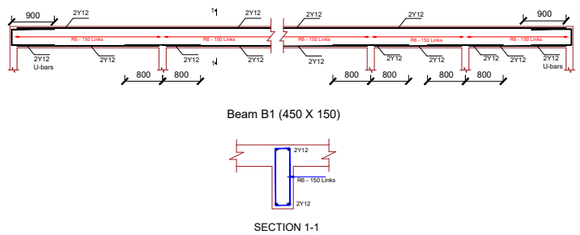

Beam B1 (450 X 150)

SECTION 1-1

Beam Details

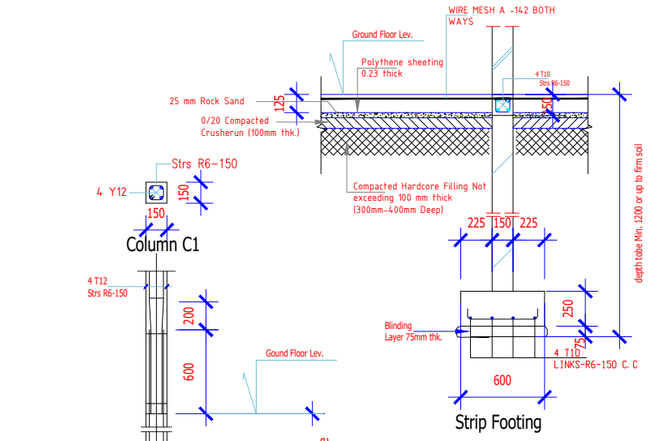

Foundation Details

Base B1 & R.C. Column C1(B1-C1)

Rev	Date	Made By	Checked By	App By
First Issue				
00	17.03.2022	A.B	M.B	

DRAUGHTSMAN :

fashion & design institute
Block A,
MITD Complex
Ebene, Reduit
Telephone: (230) 467 6277
Fax: (230) 466 4105

CLIENT :

National Youth Council

Mezzanine, Citadelle Mall,
Corner Louis Pasteur & Sir Virgil Naz Streets,
Port-Louis
Telephone: (230) 2061784
email: : nycprocurement1@gmail.com

PROJECT :
Upgrading of Youth Centre
at Goodlands

PLEASE DO NOT SCALE-
USE FIGURED DIMENSIONS ONLY

DRAWING TITLE:
Watchman Post - Structural Details

SCALE:
As Shown

DRAWING STATUS:
For Tender

DRAWING NO.:
GOO/014/NYC015

REVISION
00

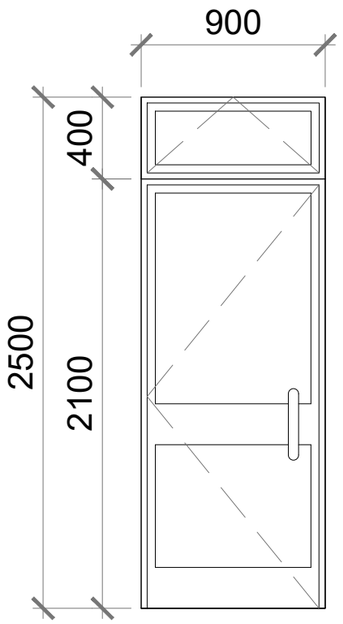

D1 Aluminium Door 1 No.

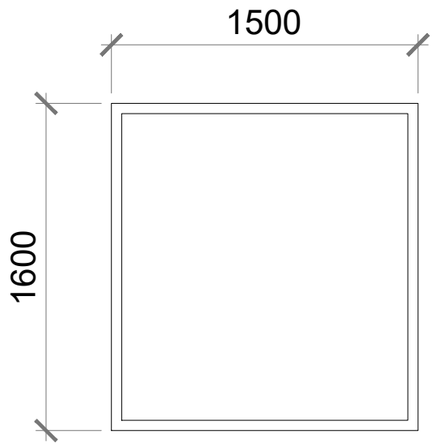

W1 Aluminium Window 2 Nos. (Fixed)

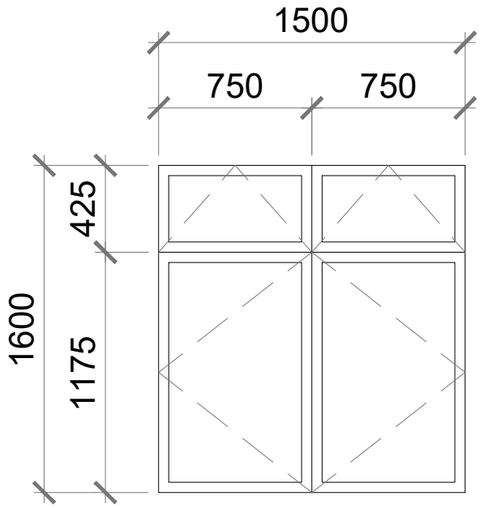

W2 Aluminium Window 1 No.

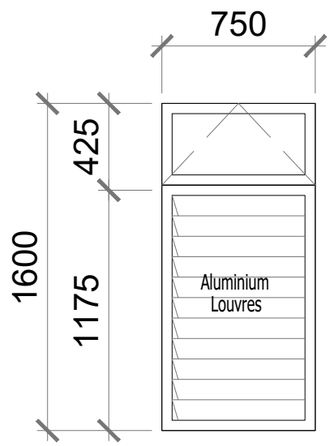

W3 Aluminium Window 1 No.

NOTES ON ALUMINIUM OPENINGS

1. Aluminium openings shall be of aluminium alloy 6060 A.G.S and shall be to BS EN 1192 and BS EN 1529 regarding height, width, thickness & squareness or as per manufacturer's specifications. For water tightness and air tightness openings shall comply to BS EN 12207 or BS EN 12208. Resistance to wind load shall be to BS EN 12210 and to withstand cyclonic winds as per current wind gusts pressure over 280km/hr substantiated with calculations and certificates as required and to the approval of the Architect. Anodisation shall be to EWAA-Euras class 20 and shall be supplied with all hinges,knobs,handles etc as required.
2. Opening to be water tight air tight BS 16375 Part 1 Class A
3. Handle & lock to be BS 6093 part 1
4. Gasket (E.P.O.M) to BS4255 part 1
5. Opening to assembly to BS6093 & Glazing to BS 6262
6. Corned cleat any other reinforcement to be used must be of same alumimiun mat.
7. 6mm thick clear glass to be used for all external doors
8. 4mm thick clear glass to be used for windows

NOTES ON DOOR CLOSER

Hydraulic rack and pinion , with separate speed

ALUMINIUM LOUVRES SHALL PROVIDES THE FOLLOWING:

- UV and corrosion resistant polypropylene clips
- Lever action handle firmly locks the blades in the closed position
- Flexible PVC weatherstrips (head and sill) and overlapping blade combine to protect against the elements

Rev	Date	Made By	Checked By	App By
First Issue				
00	17.03.2022	A.B	M.B	

DRAUGHTSMAN :

fashion & design institute
Block A,
MITD Complex
Ebene, Reduit
Telephone: (230) 467 6277
Fax: (230) 466 4105

CLIENT :

National Youth Council

Mezzanine, Citadelle Mall,
Corner Louis Pasteur & Sir Virgil Naz Streets,
Port-Louis
Telephone: (230) 2061784
email: : nycprocurement1@gmail.com

PROJECT :
Upgrading of Youth Centre at Goodlands

PLEASE DO NOT SCALE-
USE FIGURED DIMENSIONS ONLY

DRAWING TITLE:
Schedule of Openings (Watchman Post)

SCALE:
As Shown

DRAWING STATUS:
For Tender

DRAWING NO.:
GOO/014/NYC016

REVISION
00

MANHOLE DETAILS

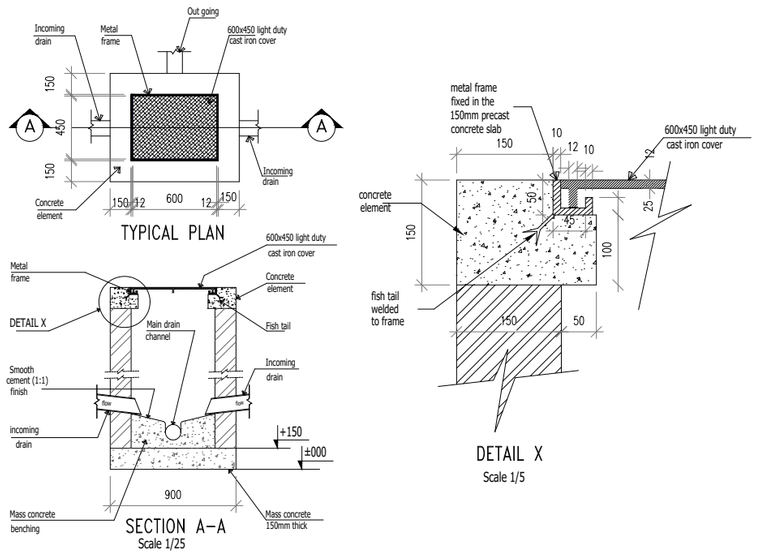

NOTE:the cover and frame is made up with cast iron

SOAK AWAY DETAILS

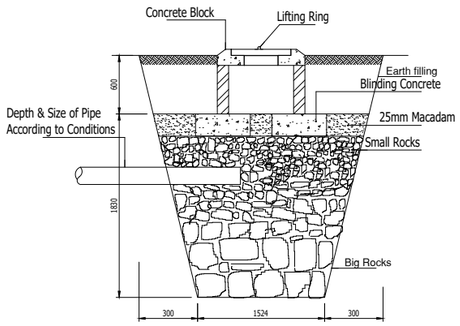

SOAK AWAY IN GOOD GROUND,
SELF SUPPORTING & ROKY GROUND

CATCH PIT DETAILS

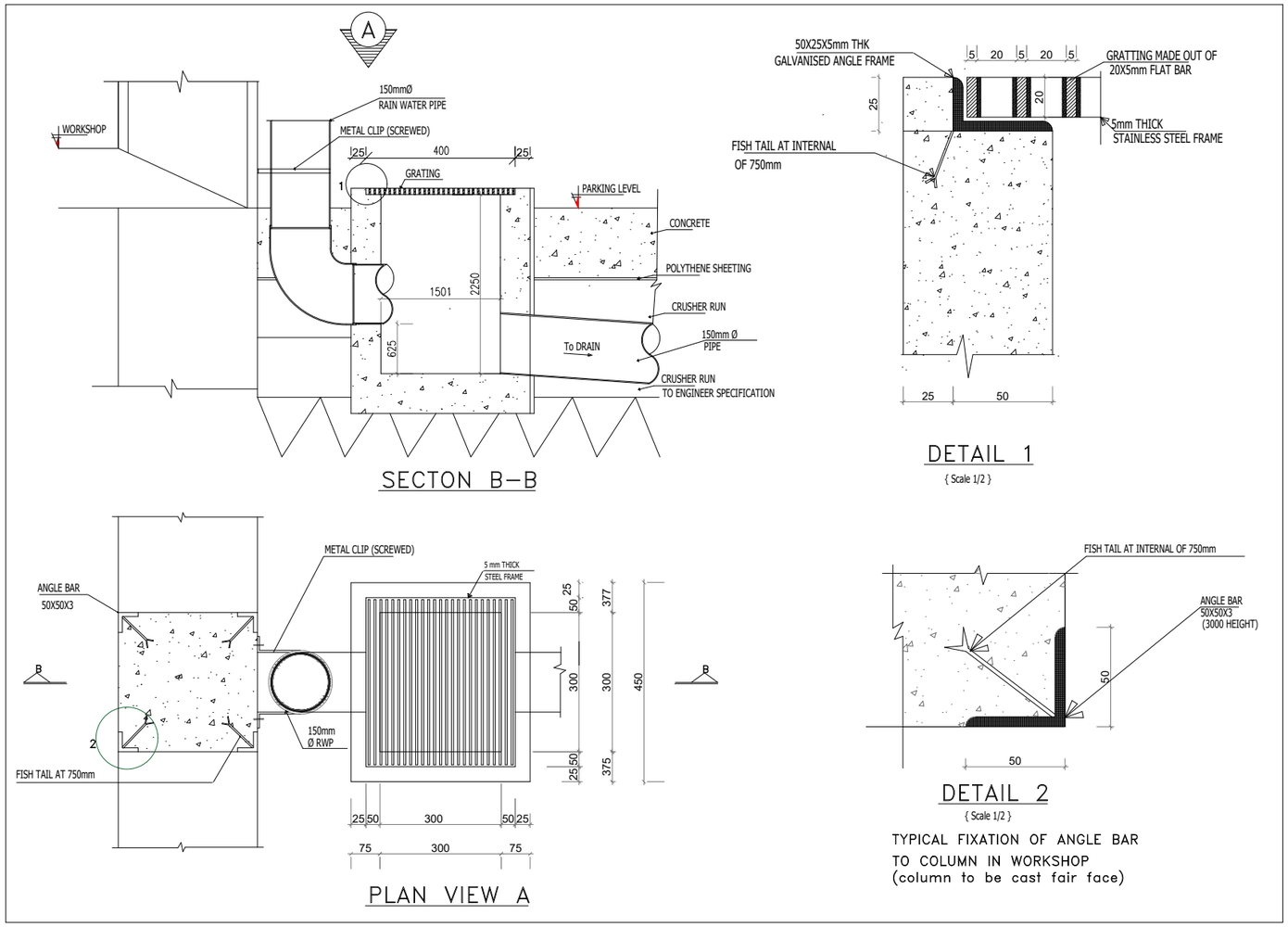

Rev	Date	Made By	Checked By	App By
First Issue				
00	17.03.2022	A.B	M.B	

DRAUGHTSMAN :

fashion & design institute
Block A,
MITD Complex
Ebene, Reduit
Telephone: (230) 467 6277
Fax: (230) 466 4105

CLIENT :

National Youth Council

Mezzanine, Citadelle Mall,
Corner Louis Pasteur & Sir Virgil Naz Streets,
Port-Louis
Telephone: (230) 2061784
email: : nycprocurement1@gmail.com

PROJECT :
Upgrading of Youth Centre at Goodlands

PLEASE DO NOT SCALE-
USE FIGURED DIMENSIONS ONLY

DRAWING TITLE:
Water Disposal Details

SCALE:
As Shown

DRAWING STATUS:
For Tender

DRAWING NO.:
GOO/014/NYC017

REVISION
00